QS - 100
QuickSTOP Collision Sensor

QuickSTOP is a dynamically variable collision sensor that operates on air pressure. At impact, the air chamber is opened, and the shutdown signal is immediately sent to the system controller.

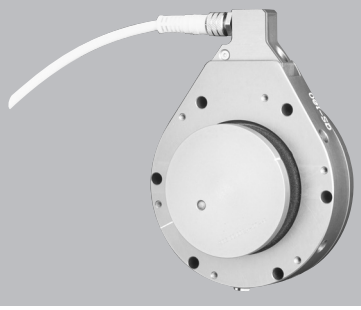

Features and Benefits

- Dynamically Variable Trip points allow you to program your collision sensor at all speeds of an operation. The breakaway threshold adjusts to match the working force ranges of your robot/application.
- All QuickSTOP models feature a noncompressive, metal to metal seal which ensures reliable and consistent operation, giving you permanent repeatability.
- Senses Angular and Compressive Forces. QuickSTOP's unique design offers protection in the X,Y, and Z axes.
- QuickSTOP monitors Performance Readiness. When pressurized, the pressure switch is closed indicating that the QuickSTOP is reset in the proper position.
- At the moment of impact, the QuickSTOP's air chamber is opened, exhausting pressure which instantly opens the pressure switch and causes loss of signal.
- Pressure loss upon impact offers better tool protection as the QuickSTOP absorbs energy and removes the force from your tool and robot wrist.

Applications

- Material Handling
- Machine loading/unloading
- Pick and place operations

Not exactly what your application requires? Applied Robotics can design a solution that meets your particular application needs.

Applied Robotics™
Solutions in reach

SPECIFICATIONS

Compliance Angle	+/-5 Deg
Axial Compliance (z+)	4.50 mm 0.177 in
Rotary Compliance	No Limit
Operating Pressure	1.0 - 6.0 bar (14.5-87 psig)
Torque trip point Mz continuously variable	5.3 - 30.4 N-m 47 - 270 in-lb
Moment trip point Mx & My continuously variable	4.1- 20.3 N-m 36-180 in-lb
Repeatability at tool mounting surface X and Y axes	+/-0.025 +/-0.001 in
Z axis	+/-0.013 mm +/-0.0005 in
Rotational	+/-0.419 radians (10^{-3}) +/-0.024 degrees
Mass	.45 kg .99 lb
Center of mass (from robot adaptor plate)	21.6 mm .85 in
Average response time	‹15 ms
Operating Temperature	Min. 0 Deg C (32 Deg F) Max. 70 Deg C (158 Deg F)
Switch Description	High reliability aircraft snap acting type. UL/CSA Approved. Average mechanical life - 7 million cycles
UL Recognized Rating 42.4 VDC max. 3 amps max.	

Engineering Data

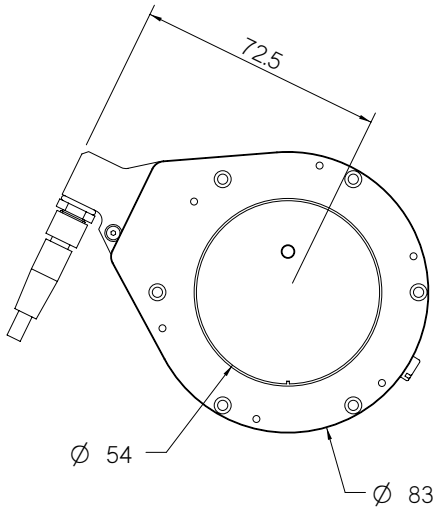

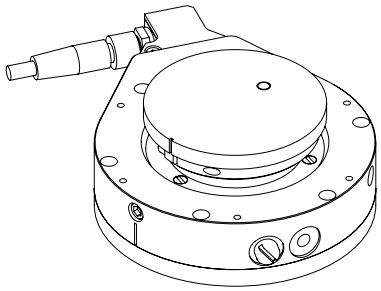

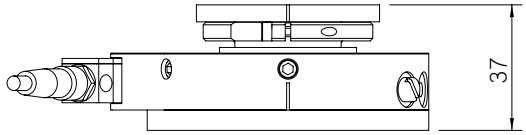

All dimensions in millimeters

Note: Specifications provided are maximum recommended limits under static conditions. For correct product sizing, consideration must be given to all dynamic forces, including manipulator inertia, tooling configuration and external process forces.

Note: For correct product sizing, please contact our Tech Support staff at techsupport@arobotics.com or at (800)309-3475 or (518)384-1000.

Moment Charts

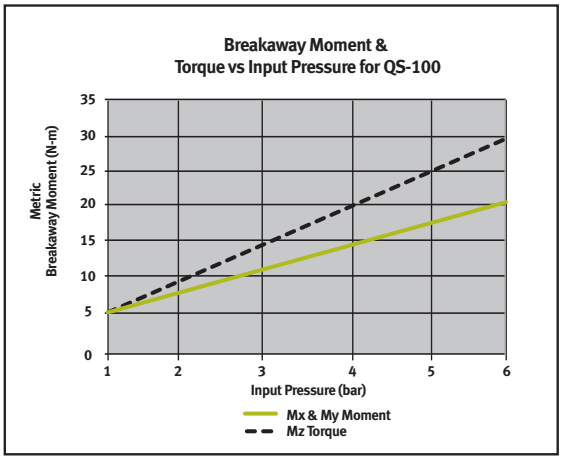

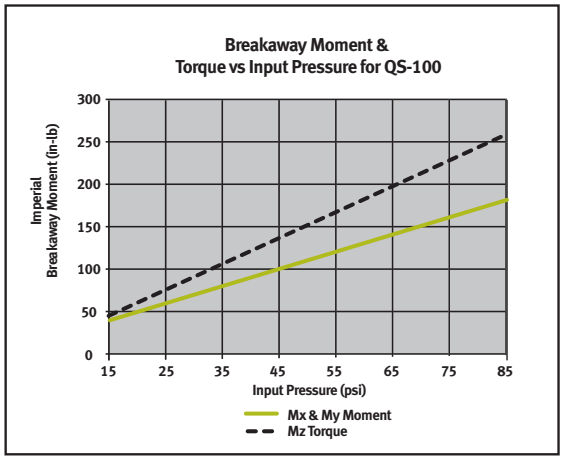

648 Saratoga Road
Glenville, NY 12302 USA
518 384 1000 tel
518 384 1200 fax

29193 Northwestern Hwy. #509
Southfield, MI 48034 USA
248 358 3677 tel
248 358 2654 fax

www.arobotics.com